for PDF - 321206-U (List 40090 Entry 1740)

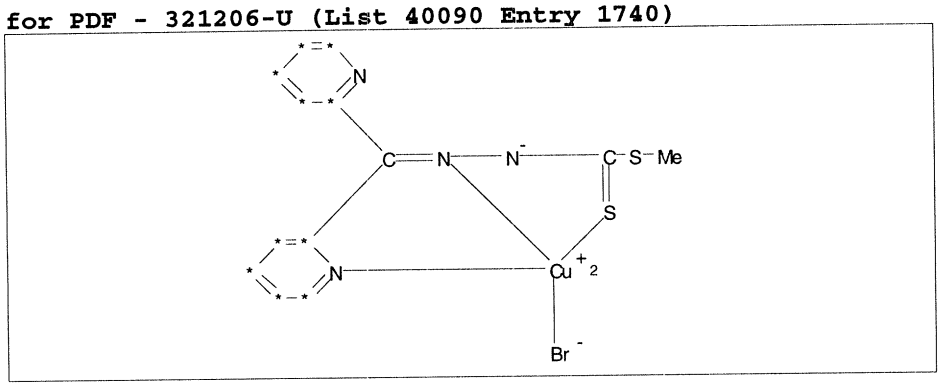

- ***Chemical Data***

CAS Registry No.	**MW**	**Molecular Formula**
	431	C13H11BrCuN4S2

- ***CNAM Chemical Names***