for PDF - 337629-V (List 40090 Entry 1780)

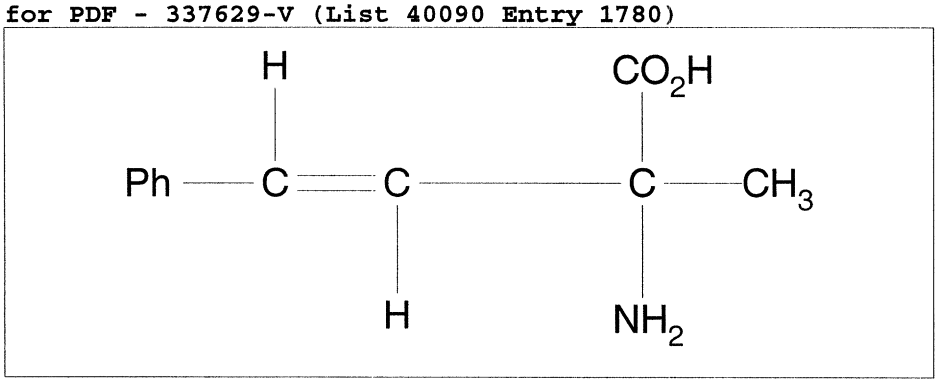

- ***Chemical Data***

CAS Registry No.	MW	Molecular Formula
	191	C11H13NO2

- ***CNAM Chemical Names***