for PDF - 521777-I (List 40090 Entry 1913)

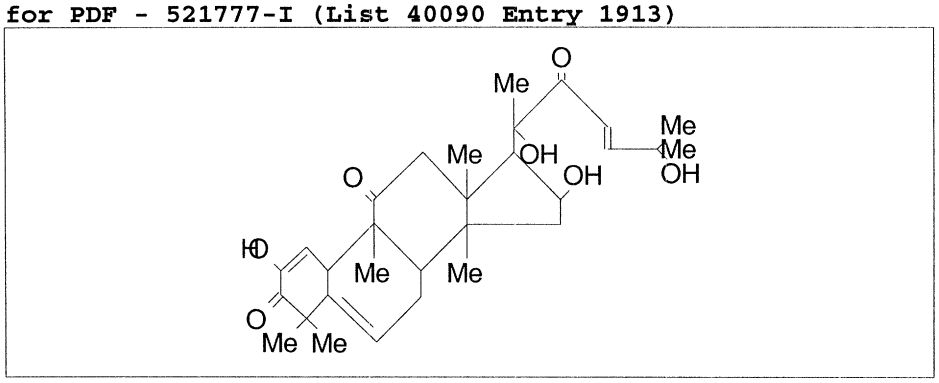

- ***Chemical Data***

CAS Registry No.	MW	Molecular Formula
2222-07-3	515	C30H42O7

- ***CNAM Chemical Names***

19-NORLANOSTA-1,5,23-TRIENE-3,11,22-TRIONE, 2,16,20,25-TETRAHYDROXY-9-METHYL-, (9.BETA.,10.ALPHA.,16.ALPHA.)- (VAN9CI)
CUCURBITACIN I
CUCURBITACIN I
1,2-DEHYDROELATERICIN A
19-NOR-9.BETA.,10.ALPHA.-LANOSTA-1,5,23-TRIENE-3,11,22-TRIONE, 9-METHYL-2,16,20,25-TETRAHYDROXY-
CUCURBITACIN I
CUCURBITACINE (I)
ELATERICIN B